OPERATORS' GUIDE

REL-SPD

HYDRAULIC SIGN POST DRIVER

The **REL-SPD** Hydraulic Sign Post Driver from **RELIABLE EQUIPMENT** has been designed to a variety of sign post styles ***FAST!***

Optional adapters to fit most non-standard post sizes are available.

WARNING

All information found in this guide must be read and understood before use or testing of this tool.

Failure to read and understand these warnings and safe handling instructions could result in severe personal injury and or death.

NOTICE

Sizes, weights and tool specifications listed in this manual are subject to change without notice. Please consult factory for information and updates.

RELIABLE EQUIPMENT & SERVICE CO., INC.

REL-SPD Manual 05-13

DISTRIBUTED BY

REGISTRATION

UPON RECEIPT OF THIS TOOL, COMPLETE THE REGISTRATION BELOW.

COMPANY _____

ADDRESS _____

_____

PHONE _____ **FAX**_____

SERIAL NUMBER _____

DATE OF PURCHASE _____

DEALER NAME _____

THIS SYMBOL INDICATES ITEMS OF EXTREME IMPORTANCE.
Safety of user and others may be in jeopardy if these instructions are not read and understood.

CAUTION

The information in this manual is intended to guide the user in the use and application of this tool. It is not intended as a substitute for proper training and experience in safe work practices for this type of equipment.

Consult your supervisor or safety personnel if you have any questions regarding the safe operation of this tool.

TABLE OF CONTENTS

Registration 2
Table of Contents 3
Description 4
General Safety 5-7
SPECIFICATIONS
General 8
Connections and Hoses 9-10
Pre-Operation 11
ON/OFF Valve for O/C or C/C (Figure 1) 11
Sign Post Adapters 12
Sign Post Driver Operation 13
Disconnect Hoses 13
MAINTENANCE
General 14
Safety Labels 14
Hydraulic Fluid 14
Accumulator - Charge & Test 15
PARTS DIAGRAMS AND LISTS
Parts List - **R27600** - In Line Remote Valve 16
REL-SPD - PARTS DRAWINGS
Figure 2 - Upper Assembly 17
Figure 3 - Body Assembly 18
Figure 4 - Drive End Assembly 19
Parts List - **REL-SPD** 20-21
Trouble Shooting 22
Maintenance Record 23
Contact Information & Illustrated Warnings 24

WARNING

Operation/Safety methods may vary in accordance with the working guidelines established by each utility or contractor.

For your own safety, ensure that you fully comply with all safe operation guidelines required by your employer.

RELIABLE EQUIPMENT & SERVICE CO., INC.

70 lbs.
30.5 in. X 8 in. X 9 in.

REL-SPD

HYDRAULIC SIGN POST DRIVER

The **REL-SPD** Sign Post Driver will drive posts of almost any configuration, including "U" channel, round, square, T-post and more.

The **REL-SPD** is fitted to accomodate most common post types, providing greater control throughout the post installation. Reducing operator fatigue due to indirect motion, and limiting damage to the top of the post.

A balanced lifting eye, in-line control valve, and dual full legth cushûın grip handles simplify lifting and operation in raised applications.

Optional post adapters are available to accomodate custom or regional post styles.

The **REL-SPD** meets State Department of Transportation (DOT) requirements for driving breakaway posts and delineators. capable of driving posts to within 4 inches (100 mm) above ground level.

Capacities

REL-SPD without accessory adapters

#2, #3 and #4 lb./ft. "U" Channel Sign Post
#3 & #4 Strong Back "U" Channel Sign Post
#1 Delineator Post
2-1/2 in. (63.5 mm) Square Post
2-5/8 in. (67 mm) Round Post

REL-SPD with accessory adapters

1 3/4" Round (T-Post)
1 3/4" Square Post
2" Round Pipe
2" Square Post
2 1/4" Square Post

RELIABLE EQUIPMENT & SERVICE CO., INC.
301 Ivyland Road • Warminster, PA 18974
Phone: 800-966-3530 • Fax: 215-357-9193
Visit us on the web at www.Reliable-Equip.com

WARNING

BEFORE USING THIS TOOL, READ THE WARNINGS and the recommended practices described in this manual. Failure by the operator to read and fully understand these warnings will leave this person unqualified to use and operate this tool. Property damage, severe personal injury, and/or death could result by not following these warnings.

These warnings will appear in appropriate locations when they are pertinent to the particular subject being shown. Read each one carefully and follow them strictly.

WARNING

Eye Protection

Always wear eye protection to avoid injury from flying debris or hydraulic oil leaks. Failure to do so can result in serious personal injury.

WARNING

Dust Mask

Always wear a dust mask. Failure to observe this warning may result in serious health issues and/or breathing difficulty.

WARNING

Hard Hat

Always wear a hard hat to avoid injury from falling debris.

Failure to do so can result in serious personal injury.

WARNING

Foot Protection

Always wear foot protection.
Failure to do so can result in serious personal injury.

WARNING

Hearing Protection

Always wear hearing protection, to avoid hearing loss due to long term exposure to high noise levels.

WARNING

Protective Gloves

Always wear protective gloves
Failure to do so can result in serious personal injury.

Safe Operation & Care

WARNING

USE THIS TOOL FOR ITS INTENDED PURPOSE ONLY Any other use can result in injury or property damage.

INSPECT TOOL BEFORE USE. Replace any worn, damaged or missing parts. A damaged or improperly assembled tool may malfunction, injuring operator and/or nearby personnel.

INSPECT HYDRAULIC HOSES AND COUPLINGS before each use. Repair or replace if any cracking, leakage, wear or damage is is found. Worn or damaged hoses may fail resulting in personal injury or property damage.

CLEAR WORK AREA of all bystanders and unnecessary personnel before operating this tool.

KEEP ALL PARTS OF THE BODY AWAY FROM MOVING PARTS.

Failure to observe this warning could result in serious injury.

Safety

WARNING

DO NOT attempt to make any changes to any of the component parts or accessories when connected to the power source.

DO NOT adjust, inspect, or clean tool while the tool is connected to the power source. The tool could accidentally start up and cause serious injury.

DO NOT lock the tool in the On Position. In an emergency, serious damage or injury could occur during the time required to stop the tool.

Oil Injection Injury

WARNING

Hydraulic oil or fluid under the skin is a serious injury. Oil under pressure can penetrate the skin and may cause dismemberment or loss of life. Seek medical assistance immediately if such an injury should occur.

Always wear safety gloves, eye protection and all required safety equipment when operating or handling this tool.

DO NOT use fingers or hands to attempt to locate a leak.

DO NOT handle hoses or couplers while system is pressurized.

NEVER open or service the system before depressurizing.

Burn Hazard

WARNING

Do Not connect or disconnect tool, hoses or fittings while power source is running or while hydraulic fluid is hot. Hot hydraulic fluid may cause serious burns.

Failure to observe this warning could result in serious injury.

Electrical Shock Hazard

WARNING

Use only certified nonconductive hoses and fittings. Always wear and use the necessary clothing, equipment and safety practices to protect against electrical shock. Failure to follow these rules can result in serious personal injury or death.

Vibration Hazard

CAUTION

Apply just enough pressure to control the tool operation. Applying excess pressure to the tool may cause operator discomfort or temporary numbness.

Failure to observe this warning could result in serious injury.

Safe Handling

CAUTION

HYDRAULIC FLUID MAY CAUSE SKIN IRRITATION.

Prevent hydraulic fluid from making contact with skin.

IN THE EVENT OF SKIN CONTACT immediately wash thoroughly.

Failure to observe this warning could result in injury.

General Safety

CAUTION

Ensure that all fellow employees and bystanders are clear and protected from possible injury caused by this tool or the operations being performed. Persons in close proximity could be injured and property damaged if the tool were to malfunction.

This tool should always be used within the limits and purposes stated by the product manufacturer. Abuse or usage beyond the manufacturers' intended purposes could cause damage to the tool and severe injury to the operator.

TOOL SPECIFICATIONS

Overall Length (W/O HOSES) ..... **30-1/2 in.**

Handle Width..... **8.0 in.**

Weight..... **70 lbs.**

HYDRAULIC POWER SOURCE SPECIFICATIONS

The following requirements are essential for the safe operaton of this tool.

Hydraulic System	**Open- or Closed- Center**	
Flow Range	**6 gpm**	Minimum
	7 gpm	Optimum
	8 gpm	Maximum
Operating Pressure	**1,800 - 2,200 psi**	
Drive Force (lbs/ft per blow)	**50 lbs/ft**	
Drive Speed	**1,500 bpm**	
Filtration	**10 Micron**	Nominal
Back Pressure	**200 psi**	Maximum*
Pressure Port Thread	**3/4-16 Female**	SAE O-Ring
Return Port Thread	**3/4-16 Female**	SAE O-Ring

* 200 psi (1,379 kPa) is the maximum agreed standard for the HTMA (Hydraulic Tool Manufacturers Association).

If you have any questions regarding the information in this manual contact **RELIABLE EQUIPMENT** at the address, phone or fax numbers on page 3.

WARNING

These specifications must be strictly adhered to for the safe and effective operation of this tool.

HYDRAULIC FLOW MUST NOT EXCEED 8 GPM

LIMIT RELIEF SETTINGS TO 2,000 PSI (13,790 kPa)

Any deviation can result in severe injury or death to the operator and or extraneous personnel.

HOSES AND FITTINGS

Care must be exercised in the use of hose and fittings for use on hydraulic tools, especially in confined areas. Any obstruction or abrasive surrounding could damage the hose and cause a serious accident. Always use the recommended hose for the tool that is being used. Always consult the dealer or distributor for the correct hoses and purchase from him to ensure, from a safety standpoint that the materials used in the manufacture of the hoses is to the correct specification for the application. Fittings must meet the standards established by the industry to adequately assure safety. Poor quality or low rated fittings are not to be used. They invite a serious accident.

Length: Hose must be the correct length for the general use of the tool or for the specific function it is to provide. Pressure surge is an important factor in the selection of hoses. The hose should be rated above the expected surge pressure to ensure adequate safety. Hoses that are too long will have a tendency to coil, kink, or move in multiple directions creating a safety hazard. Hoses that are too long will rub or chafe against the ground or projecting objects, seriously shortening the life of the hose. It may be advisable to carefully restrain a hose which is temporarily too long for the current application. Pressure surge can cause whipping, and seriously damage the hose. Always keep the hose length as short as possible for the operation which is it intended.

Size: The hose must be large enough to carry the pressurized flow of fluid to the end application without creating undue heat generation or excessive turbulence. These factors could cause excessive wear to the hose from any or all of the above reasons.

Pressure: Hose selection must be made so that the *recommended maximum operating pressure is greater than the system pressure.* A surge or sudden drop in pressure will cause the hose to deteriorate faster if the maximum pressure of the hose is significantly below the surge pressure. A hose with a top rate of pressure as the line pressure of the installation is not an accepted safety practice. Always err on the side of safety.

Temperature: Hose can be seriously damaged by passing over or near hot objects. Avoid any situation that will heat the hose. Serious damage and/or failure will occur.

Unusual Applications: Careful thought and research should precede installation of hoses. Thorough and protected testing, with appropriate safety guards, must be done to avoid injury before general use.

Connections: Hoses must have the proper end fittings in order to mate correctly with connectors. Worn or damaged connectors and worn end fittings on the ends of the hose can cause a failure. Pressure surge can cause a slow or sudden failure at the connection causing serious damage or injury.

Safety Check: Before using any installation, perform a thorough checkout to determine if any of the above or unforeseen problems occur. Initial testing with safety guards is an invaluable safety precaution.

Always consult the distributor or manufacturer for the correct specifications regarding any of the items discussed above. **The correct hoses and fitting are available from your supplier.**

WARNING

There exists the potential for **SHOCK** in using anything other than certified non-conductive hoses and hydraulic oil with dielectric properties when using system components near **ENERGIZIZED ELECTRICAL LINES**. Failure to recognize these conditions could cause **ELECTROCUTION**.

Hoses and fittings used with this tool must comply with **S.A.E. J1273** recommended practice for selection, installation, and maintenance of hose assemblies.

UNIT/HOSE CONNECTIONS

WARNING

ALWAYS SHUT OFF pump/power source and move flow selector to **OFF** before connecting or disconnecting system components.

ALWAYS DEPRESSURIZE hydraulic system before slowly disconnecting this unit or any of the systems components.

ALWAYS TIGHTEN couplings completely. Loose or improperly tightened couplings will not allow fluid to pass through the hose creating a blockage in the supply or return line.

ALWAYS INSPECT HOSES AND CONNECTORS before connection to tool. Replace or repair if any leakage is evident. Leakage is a sign of deterioration in component parts. Worn or leaking parts must be repaired or replaced, or tool damage or severe injury could result.

HOSE INSTALLATION

CAUTION

Care must be taken to assure the correct connection of the hoses to the pressure "P" and return "T" ports.

Connect the return hose to the return port on the power source, then to the return "T" port on the tool.

Connect the pressure hose to the pressure port "P" on the tool, then to the pressure port on the power source.

Operation with hydraulic flow reversed can cause malfunction. Failure to fully comply can result in tool damage, injury, or death.

HOSES AND FITTINGS

WARNING

There exists the potential for shock in using anything other than certified nonconductive hoses and hydraulic oil with dielectric properties, when using system components near energized electrical lines. Failure to recognize these conditions could cause electrocution.

Hoses and fittings used with this tool must comply with S.A.E. J1273 which covers recommended practice for selection, installation, and maintenance of hose and hose assemblies. The **correct hoses and fittings are available from your supplier.**

WARNING: Failure to comply with these warnings could result in severe bodily injury.

PRE-OPERATION OF TOOL

DO NOT connect hoses or fittings to this unit before completing all of the instructions in this section.

Ensure power source is **OFF**, and hydraulic flow is lever is turned **OFF**.

Failure to comply with this warning can result in severe injury or death.

Before attempting to run or use the tool, check all connections, including hoses, and couplings.

Ensure that valve is moving freely.

Wear all safety items required and make sure that the working area is clear of obstructions and non essential personnel.

Set the Valve to Open- or Closed-Center, according to which system the power supply pump provides. It is important to know which type of power system is supplying the tool so that the REL-SPD can be properly set.

All these items are crucial to the safe operating procedure of the REL-SPD.

Tool Set-up for Open-Center or Closed-Center Systems

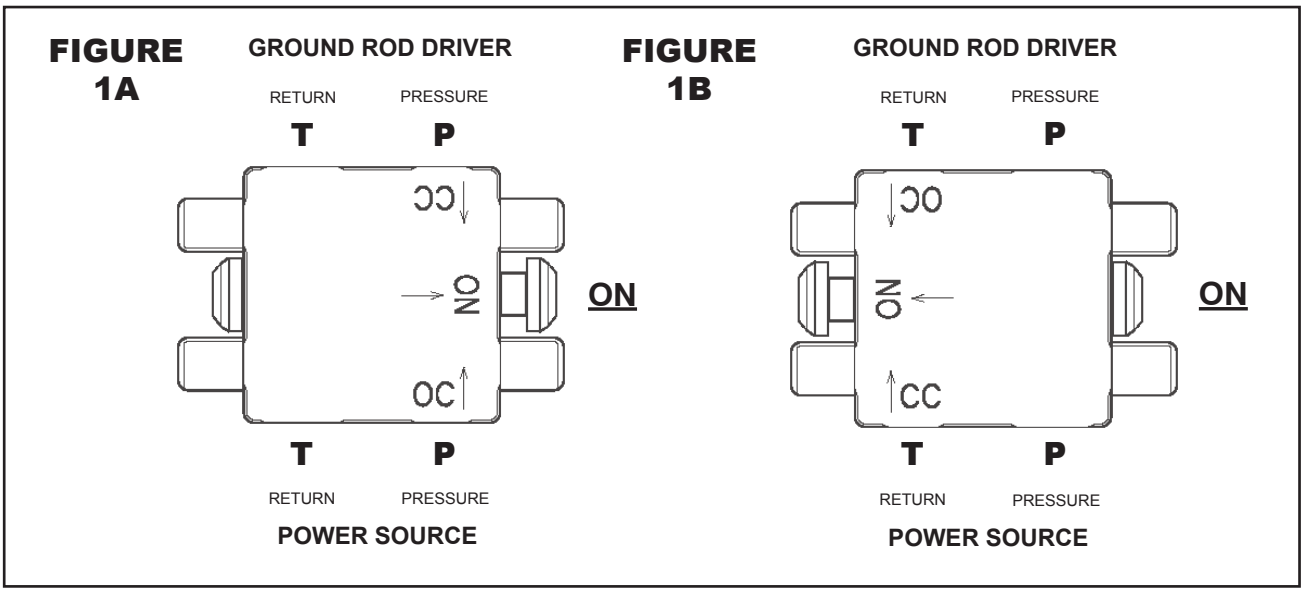

Model REL-SPD (Refer to the illustration in **Figure 1A** above.)

This model is factory configured for Open-Center operation. (as shown above) Connect pressure and return from power source to OC ports on valve as shown above.

Valve Conversion for Closed-Center Operation: (Refer to **Figure 1B** above)

Rotate valve 180°. Connect return & pressure hoses from REL-SPD to OC ports on valve. Connect the return and the pressure hoses from power source to the CC ports on valve as shown above.

DEDICATED SIGN POST ADAPTORS

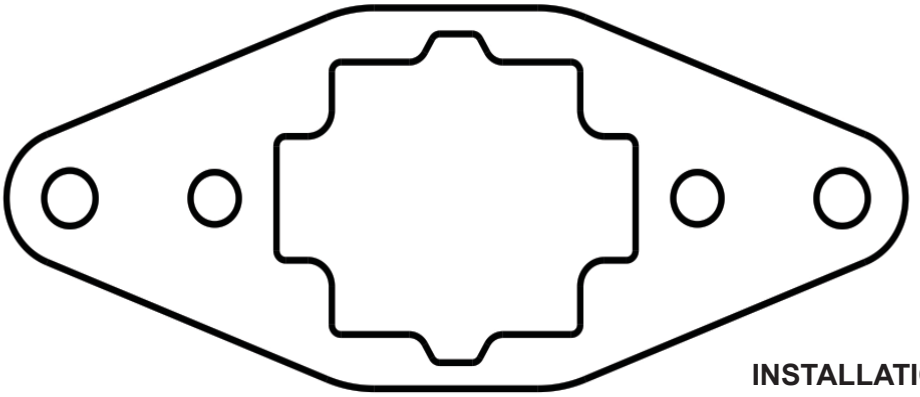

UNIVERSAL
SIGN POST DRIVER
FRONT HOUSING

INSTALLATION
Insert Post Guide into Front Housing and Secure with 1/2-13 x 7/8 Long Socket Head Cap Screw.

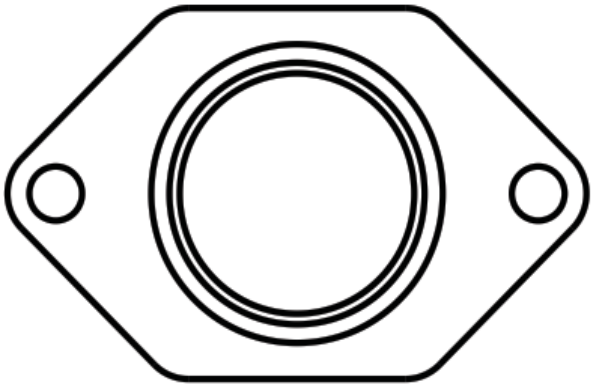

48600
LARGE ROUND
2.43 I.D.

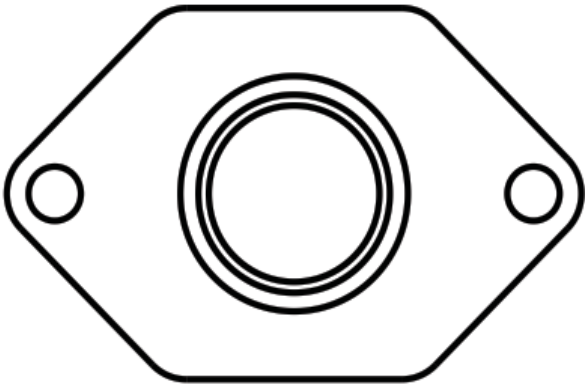

48601
SMALL ROUND
1.781 I.D.

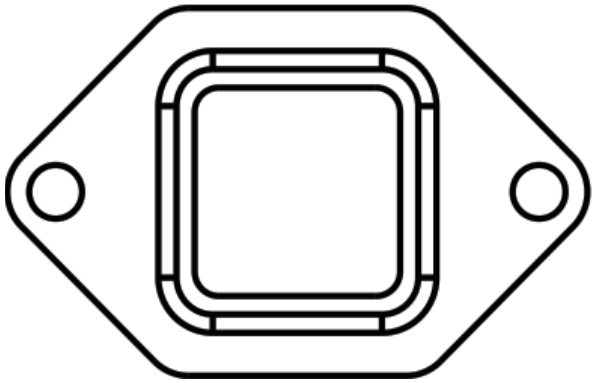

48602
LARGE SQUARE
2.125 SQ.

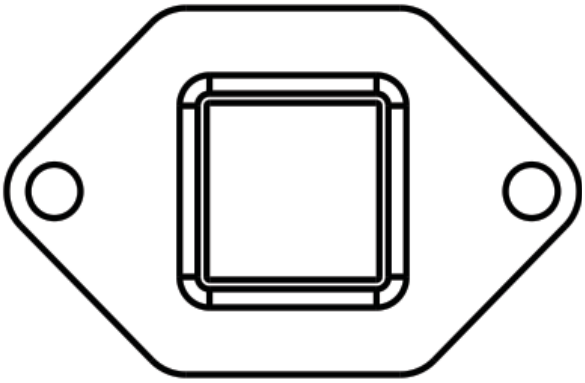

48603
SMALL SQUARE
1.810 SQ.

SIGN POST DRIVER OPERATION

There are a number of safety items that need to be addressed when using the tool.

Seek out the supervisor for basic instruction in handling the tool. Some basic problems are easily overcome by knowing the rules of operation.

Make sure that the correct adaptor (if required) for the post size and shape being driven has been properly installed. *See previous page*

Inspect, set-up and connect the tool as described on the previous pages.

Start the hydraulic power source.

Allow the power source to run for a few minutes to warm the hydraulic fluid.

Slide the Sign Post into the Driver/Adaptor.

Raise the Sign Post and the Driver to a vertical position and ensure that adequate down pressure is applied.

NOTE: Due to the weight and raised position of the Post and Driver, it is recommended that the lifting procedure be proformed by two persons for lift and transport.

Activate control valve or control spool to the **ON** position. (Refer to Figure 1A or 1B)

Firmly grasp the handles with both hands. Ensure proper footing and balance.

Apply light downward pressure to the REL-SPD.

WARNING: Driver operation does not require excessive pressure. Excess pressure may cause operator discomfort, fatigue or numbness. Operator must maintain a firm grip and proper balance, cotroling the tool with both hands at all times. Failure to maintain control of the tool could result in severe personal injury or death.

When finishing with the operation, move the control spool to the **OFF** position.

Move the flow lever on the power source to the **OFF** position.

Stop the hydraulic power source.

WARNING: DO NOT disconnect the tool, hoses, or fittings while the tool is running, hot, or under pressure. Serious injury or burns could result.

DISCONNECT HOSES

Move the flow lever on the power source to the **OFF** position.

Stop hydraulic power source. (Operate valve several times to relieve any residual pressure)

Disconnect the pressure hose from the pressure “P” port on the power source, then disconnect the hose from the pressure port on the tool.

Disconnect the return hose from the return “T” port on the tool, then disconnect the hose from the return port on the power source.

Install dust caps on all connectors to prevent dirt and contaminents from entering the hydraulic system.

MAINTENANCE

The life, reliability, and safety of the tool is dependent on proper maintenance.

DAILY MAINTENANCE

Clean all surfaces including body, handles, trigger, valve, fittings, hoses and adaptors

Inspect tool and adapters for wear and/or damage.
Worn or damaged parts can cause malfunction during operation.

Inspect for cracked hoses and leaking fittings.

Check fluid level of the power source reservoir frequently.

All the above items must be replaced with new parts if signs of wear are evident.

FLUID CONTAMINATION: Cover the ends of fittings with a dust cap when disconnected. This will help keep the fluid from contamination.

MONTHLY MAINTENANCE: Inspect per Appendix A, SAE Standard J1273, 5/86 for hose or fitting damage such as wear, cracks or leakage, replace the necessary parts.

NOTE: Keep Label Set clean and legible. Replace decals when necessary.

WARNING

BEFORE USING THIS PRODUCT READ THE SAFETY WARNINGS and recommended practices described in the manual. Failure by the operator to read and fully understand the warnings will leave this person unqualified to use and operate the tool.

Failure to observe all warnings and instructions could result in property damage, severe personal injury, and/or death.

WARNING

This tool is factory configured for Open-Center Tool Systems. Convert for Closed-Center Use
Rotate the valve 180°. Connect from tamper to OC ports on valve.

Connect return and pressure from power source to the CC ports on valve.
Failure to observe all warnings could result in property damage, severe injury, and/or death.

CAUTION

Operation and safety methods may vary in accordance with the guidelines established by each utility.
For your safety, ensure that you fully comply with all safe operation guidelines established by your respective power utility.

REL-SM

DANGER

The user should be properly trained in the correct procedures required for work on or around electrical lines.

See Back Cover for Illustrated Safety Label

HYDRAULIC FLUIDS

All hydraulic fluids that meet these listed specifications or the listed HTMA specifications may be used for this tool.

S. U. S.

@ 100° F (38° C) ..... **140 TO 225**

@ 210° F (99° C) ..... **40 minimum**

FLASH POINT ..... **340° F min.** (170° C min.)

POUR POINT ..... **-30° F min.** (-34° C min.)

TESTING AND CHARGING THE ACCUMULATOR

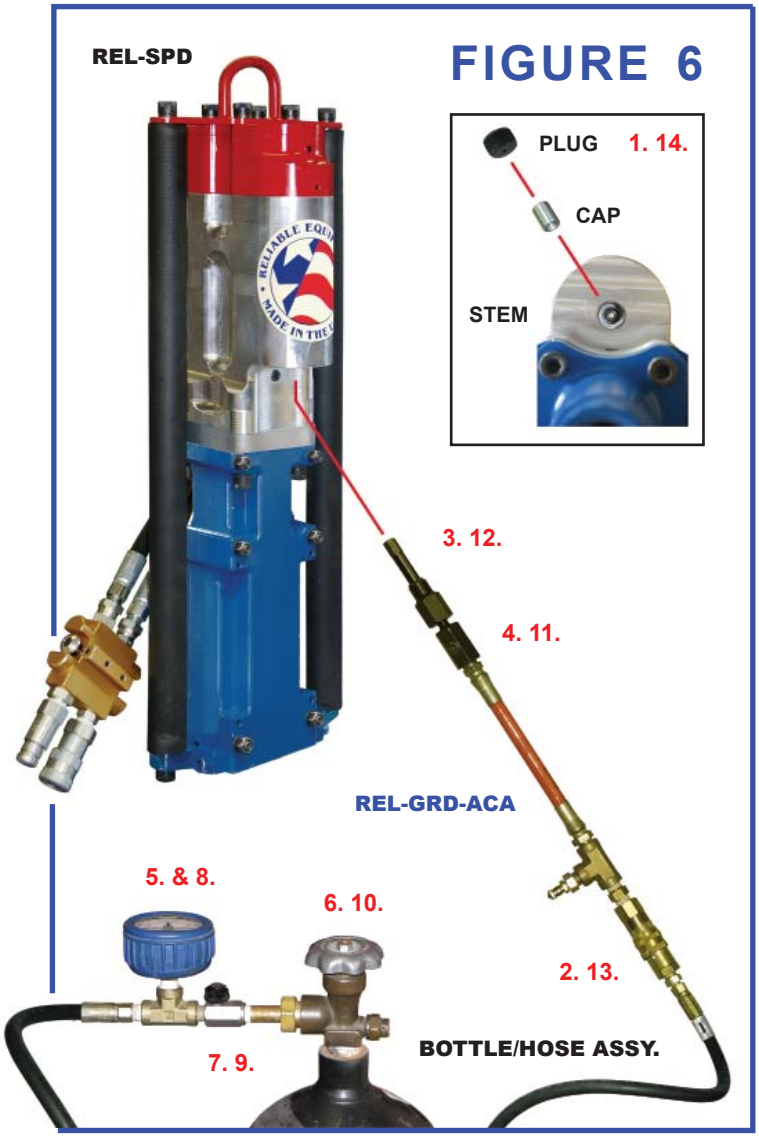

REL-GRD-ACA

Testing or charging the accumulator will require charging assembly REL-GRD-ACA

A **NITROGEN** bottle with Valve and Gauge. (min. 800 psi / 56 bar charge required)

A length of compatible hose adequate to perform the tasks described without streching or kinking the hose or assembly.

INSTRUCTIONS

1. Remove the Plug and Cap located at Tool Body bottom, opposite couplers.
2. Connect the Charging Assembly to the Hose / Bottle Assembly.
3. Thread the Charging Assembly onto the Accumulator Stem.
4. Tighten Swivel.
5. Check Pressure Gauge. (600 PSI Min.) If pressure is below 600 psi continue.
6. Turn on the Valve on NITROGEN Bottle.
7. Open In-Line Valve slowly.
8. Observe Gauge and fill to 650 psi.
9. Turn OFF supply at In-Line Valve.
10. Turn Off supply at the Bottle.
11. Release Swivel
12. Remove Assembly from Stem.
13. Remove Assembly from Hose / Bottle.
14. Replace Stem Cap and Plug.

Safety

WARNING

<u>DO NOT</u> attempt to make any changes to any of the component parts or accessories when connected to the power source.

<u>DO NOT</u> adjust, inspect, or clean tool while the tool is connected to the power source. The tool could accidentally start up and cause serious injury.

If you have any questions regarding the information in this manual contact **RELIABLE EQUIPMENT** at the address, phone or fax numbers On page 3 or the back cover of this manual.

R27600 - IN LINE REMOTE ON/OFF VALVE - Parts List

1	VALVE BODY	1	R27601
2	SPOOL	1	R27602
3	O-RING	2	R27052
4	BUTTON	2	13138
5	SCREW	2	13139
6	PIPE PLUG	3	12791
7	O-RING	1	R27030A
8	O-RING	1	R27074
9	RETURN LINE ADAPTER (LARGE)	4	R27073
10	PRESSURE LINE ADAPTER	2	R27071
11	HOSE ASSEMBLY, OUTSIDE (70 IN.)	1	R48150
12	HOSE ASSEMBLY, INSIDE (69 IN.)	1	R48151
13	PORT ADAPTER	2	R48060

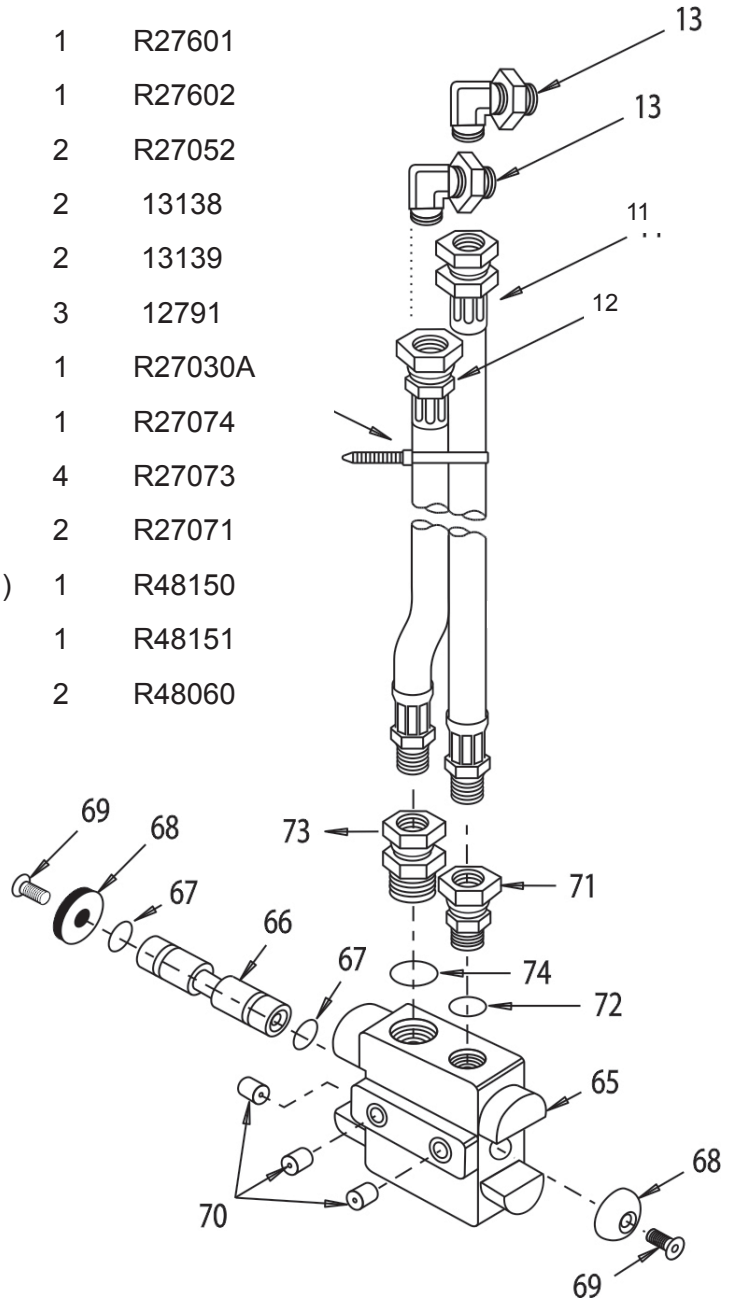

⚠ WARNING ⚠

Before disassembly, disconnect hoses as described in this manual.

Any residual pressure within the unit can and will spray at high velocity, injuring the person doing the disassembly.

Hot or pressurized hydraulic fluids will cause serious injury or death.

Complete disassembly of the Sign Post Driver is <u>NOT</u> recommended.

Return the unit to an authorized dealer for total disassembly and/or repair.

All maintenance or disassembly should take place on a flat, clean work surface covered with towels or wipers so as to have a clean space for the disassembled parts.

Inspect each part during disassembly for wear, scratches, and cuts. Discard the worn or damaged parts and replace with new factory authorized parts.

O-rings are sensitive to sharp edges. Inspect closely for cuts or damage. A small cut will cause a leak. When assembling or disassembling O-rings, use hydraulic fluid as a lubricant to aid disassembly or installation.

REL-SPD

HYDRAULIC SIGN POST DRIVER

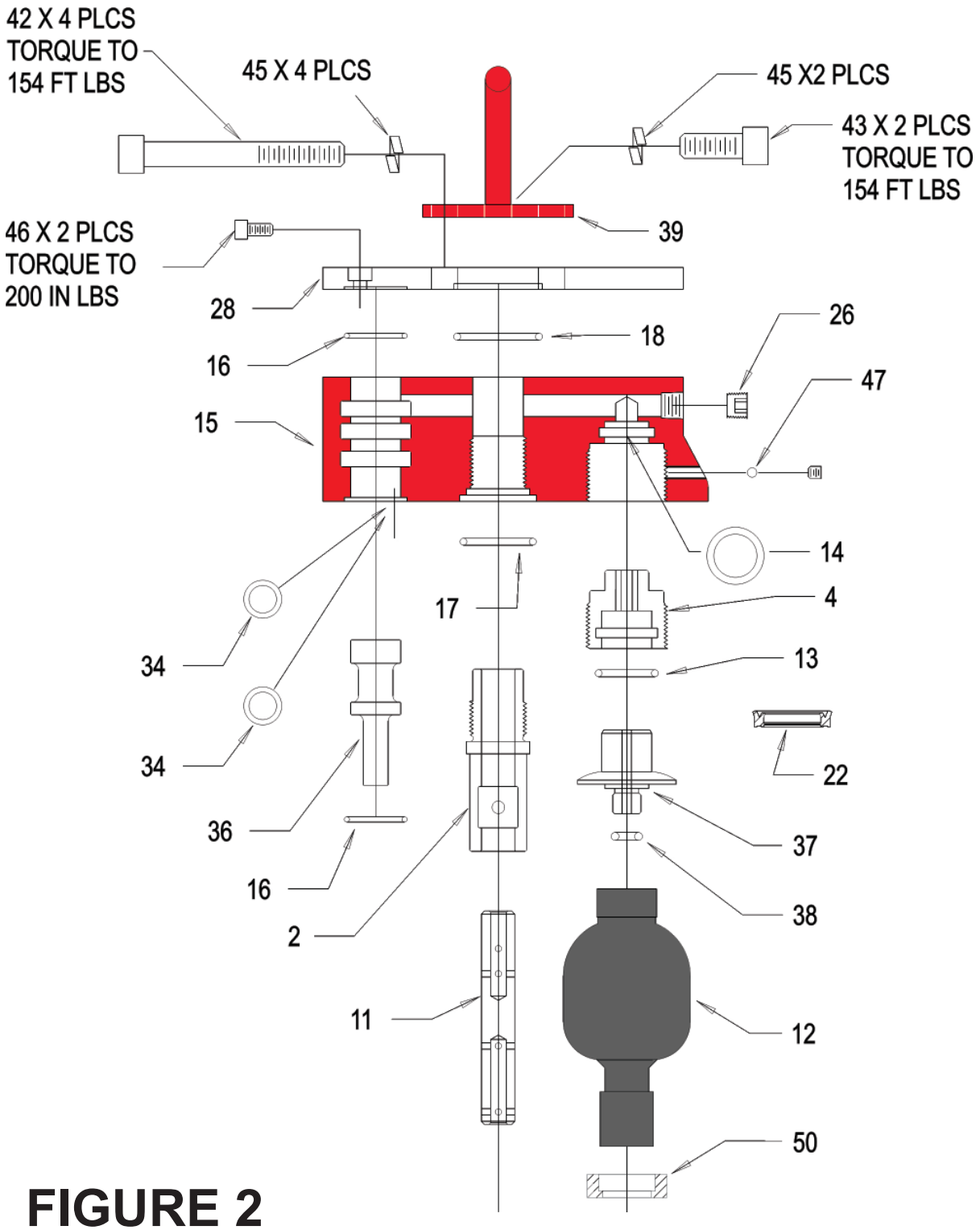

FIGURE 2

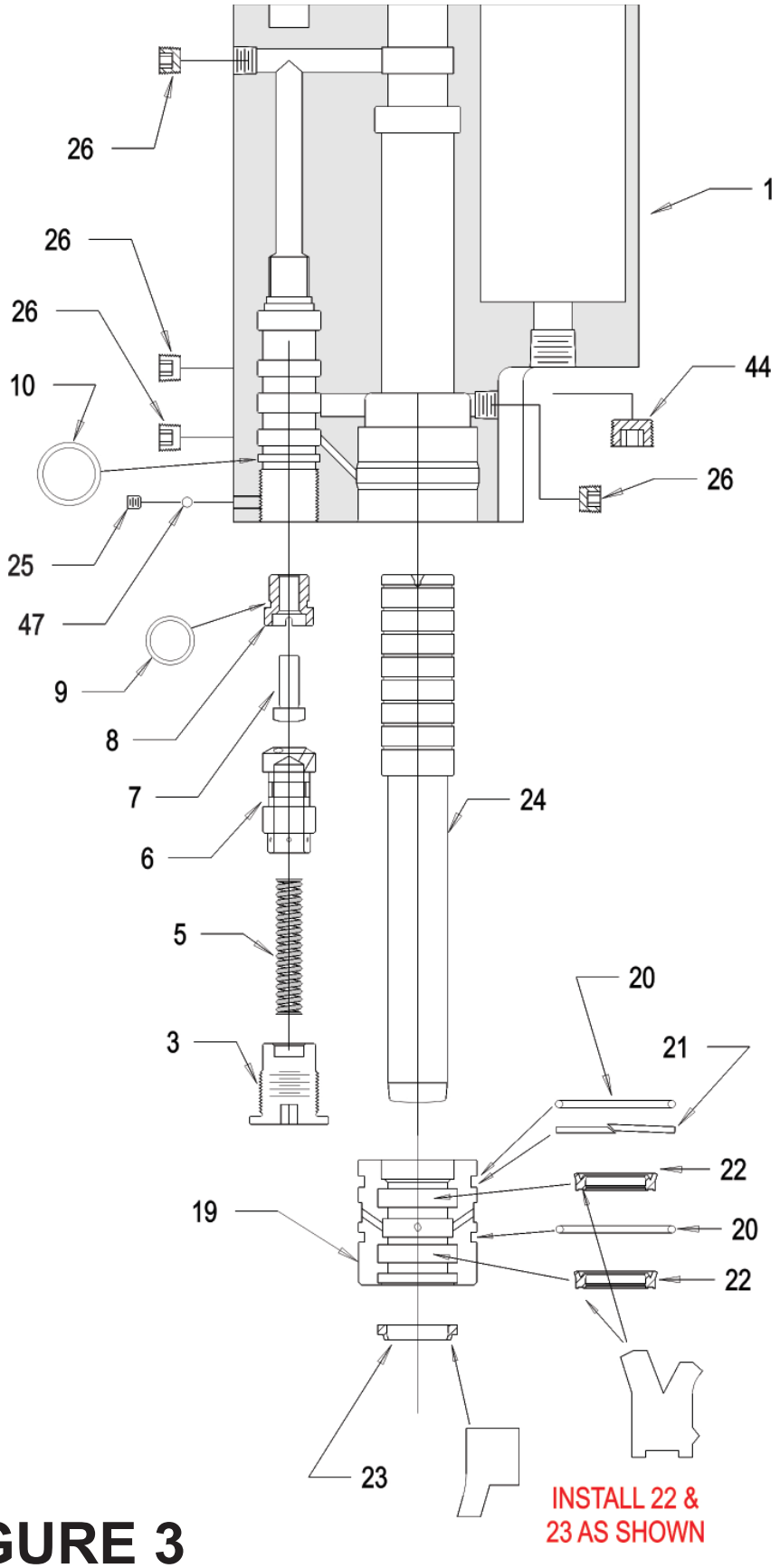
26
26
26
10
25
47
9
8
7
6
5
3
19
23
1
44
26
24
20
21
22
20
22
INSTALL 22 &
23 AS SHOWN

FIGURE 3

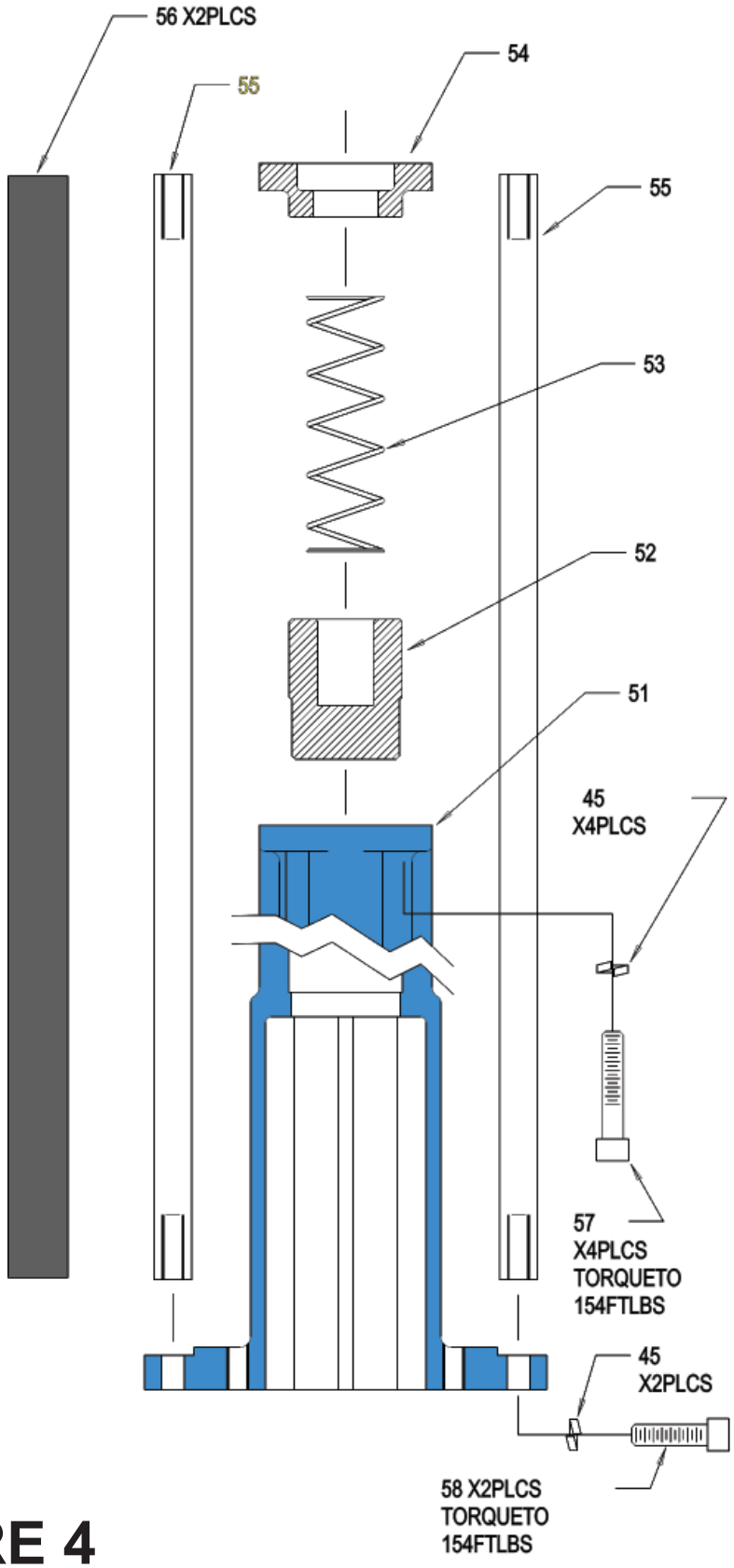
56 X2PLCS
55
54
55
53
52
51
45
X4PLCS
57
X4PLCS
TORQUETO
154FTLBS
45
X2PLCS
58 X2PLCS
TORQUETO
154FTLBS

FIGURE 4

REL-SPD - SIGN POST DRIVER - PARTS LIST

ITEM	PART #	QTY	DESCRIPTION	DRAWING
1	48001	1	BODY	3
2	48002	1	BUSHING, PISTON	2
3	48003	1	END PLUG	3
4	48004	1	INSERT	2
5	48005	1	SPRING, SHUTTLE	3
6	48006	1	SHUTTLE SPOOL	3
7	48007	1	PLUNGER	3
8	48008	1	BUSHING, PLUNGER	3
9	48009	1 *	O-RING, PLUNGER BUSHING	3
10	48010	1 *	O-RING, END PLUG	3
11	48011	1	PISTON	2
12	48012	0	ACCUMULATOR	2
13	48013	1 *	O-RING, INSERT	2
14	48014	1 *	O-RING, VALVE BODY	2
15	48015	1	VALVE BODY	2
16	48016	2 *	O-RING, VALVE BODY	2
17	48017	1 *	O-RING, VALVE BODY	2
18	48018	1 *	O-RING, VALVE BODY	2
19	48019	1	GLAND	3
20	48020	2 *	O-RING, GLAND	3
21	48021	1 *	BACK-UP RING	3
22	48022	3 *	U-CUP	2 & 3
23	48023	1 *	WIPER	3
24	48024	1	RAM	3
25	48025	2	SET SCREW, 1/4 LG	3
26	48026	5	PLUG	3
28	48028	1	END CAP	2
34	48034	2 *	O-RING, VALVE BODY	2
36	48036	1	VALVE SPOOL	2
37	48037	1	PLUG, ACCUMULATOR	2
38	48038	1 *	O-RING, ACCUMULATOR PLUG	2
39	48039	1	LIFTING PLATE	2
42	48042	4	SCREW. LIFTING PLATE 4 LG	2

REL-SPD - SIGN POST DRIVER - PARTS LIST

ITEM	PART #	QTY	DESCRIPTION	DRAWING
42	48042	4	SCREW. LIFTING PLATE 4 LG	2
43	48043	2	SCREW, HANDLE, TOP 1-1/4 LG	2
44	48044	1	PLUG	3
45	48045	12	LOCK WASHER	2
46	48046	4	SCREW, END CAP 1/2 LG	2
47	48047	2	PLASTIC BALL	2 & 3
49	48049	1 *	O-RING, NITROGEN SEAL	3
50	48050	1	NITROGEN SEAL	3
51	48501	1	FRONT HOUSING	4
52	48502	1	HAMMER	4
53	48503	1	SPRING	4
54	48504	1	COVER PLATE	4
55	48505	2	ROD, HANDLE	4
56	48506	0	CUSHION GRIP, SIGN POST	4
57	48507	4	SCREW, FRONT HOUSING 2 1/2 LG	4
58	48508	2	SCREW, HANDLE, BOTTOM 1 3/4 LG	4
	48100		* ITEMS IN SEAL KIT	

Hoses and fittings used with this tool must comply with S.A.E. J1273 which covers recommended practice for selection, installation, and maintenance of hose and hose assemblies. The **correct hoses and fittings are available from your supplier.**

WARNING: Failure to comply with these warnings could result in severe bodily injury.

WARNING

Safety

DO NOT attempt to make any changes to any of the component parts or accessories when connected to the power source.

DO NOT adjust, inspect, or clean tool while the tool is connected to the power source. The tool could accidentally start up and cause serious injury.

If you have any questions regarding the information in this manual contact **RELIABLE EQUIPMENT** at the address, phone or fax numbers On page 3 or the back cover of this manual.

TROUBLE SHOOTING

Determine the source (i.e. tool or hydraulic system) **of the problem before trouble shooting.**

NOTE: A mischarged accumulator may contribute to a variety of tool inconsistencies. Please refer to the **Accumulator Recharging Procedures** on page ____ of this manual.

Will not run

Ram is restricting hydraulic fluid — Apply lighht load to Ram by placing tool onto rod and raising to the verticle position.

Improper power source ..... Verify power source meets specifications
Low hydraulic fluid ..... Check fluid level
Incorrect viscosity ..... Use recommended fluid
Tool damaged ..... Disassemble and replace damaged parts
Hoses incorrectly connected ..... Switch hoses (*see hose connection in this manual*)
Dirt in tool ..... Disassemble, clean and repair as needed.

Tool runs slow

Power supply not functioning correctly ..... Reset to operator manual specs.
Fluid not warmed to correct temp ..... Allow tool a warm-up period
Fluid viscosity too high ..... See recommended viscosity
Air in hydraulic system ..... Check hoses for breaks, leaks, or loose connections
Hydraulic fluid level low ..... Fill to level. Check for leaks
Tool components loose ..... Tighten component hardware
Worn or damaged components ..... Replace worn or damaged components

Tool runs too fast

Power supply not functioning correctly ..... Reset to operator manual specs.
Excessive downward pressure ..... Do not apply downward pressure.

Tool operation is erratic

Hydraulic fluid not warm ..... Allow oil to warm up
Dirt or contaminants in tool ..... Clean and reassemble
Air in system ..... Check hoses for breaks, leaks, or loose connections

Tool runs continuously

Tool locked in “ON” position ..... Release trigger lever lock

Valve operation is difficult

Tool valve spool dirty ..... Clean up spool so that spool slides freely
Components worn or damaged ..... Replace damaged components

Tool runs hot

Low fluid level ..... Fill pump reservoir to correct level
Fluid viscosity incorrect ..... Use recommended fluid
Fluid dirty ..... Drain tank, flush, and replace fluid
Power supply not functioning correctly ..... Reset to operator manual specs
Worn or damaged O-rings or gaskets ..... Replace worn or damaged components
Hydraulic fluid level low ..... Fill to level. Check for leaks

Tool is erratic

Hydraulic fluid not warm ..... Allow oil to warm up
Dirt or contaminants in tool ..... Clean and reassemble
Air in system ..... Check hoses for breaks, leaks, or loose connections

Tool leaks hydraulic fluid

Worn or damaged seals ..... Disassemble and replace worn or damaged seals
Components loose ..... Tighten component hardware

Tool lacks power

Maintenance Records

Date	Parts or Service Required

IF YOU HAVE QUESTIONS REGARDING THE REPAIR AND MAINTENANCE OF THIS TOOL CONTACT RELIABLE EQUIPMENT AT 800-966-3530

USER NOTES

If you have any questions regarding the information in this manual please contact **RELIABLE EQUIPMENT** at the address, phone or fax numbers shown below.

RELIABLE EQUIPMENT & SERVICE CO., INC.

301 Ivyland Road • Warminster, PA 18974
Phone: 800-966-3530 • Fax: 215-357-9193
Visit us on the web at www.Reliable-Equip.com